5G/LTE M.2 B key to USB 3.0 Adapter
P/N: WS18 V1.1

Release History:
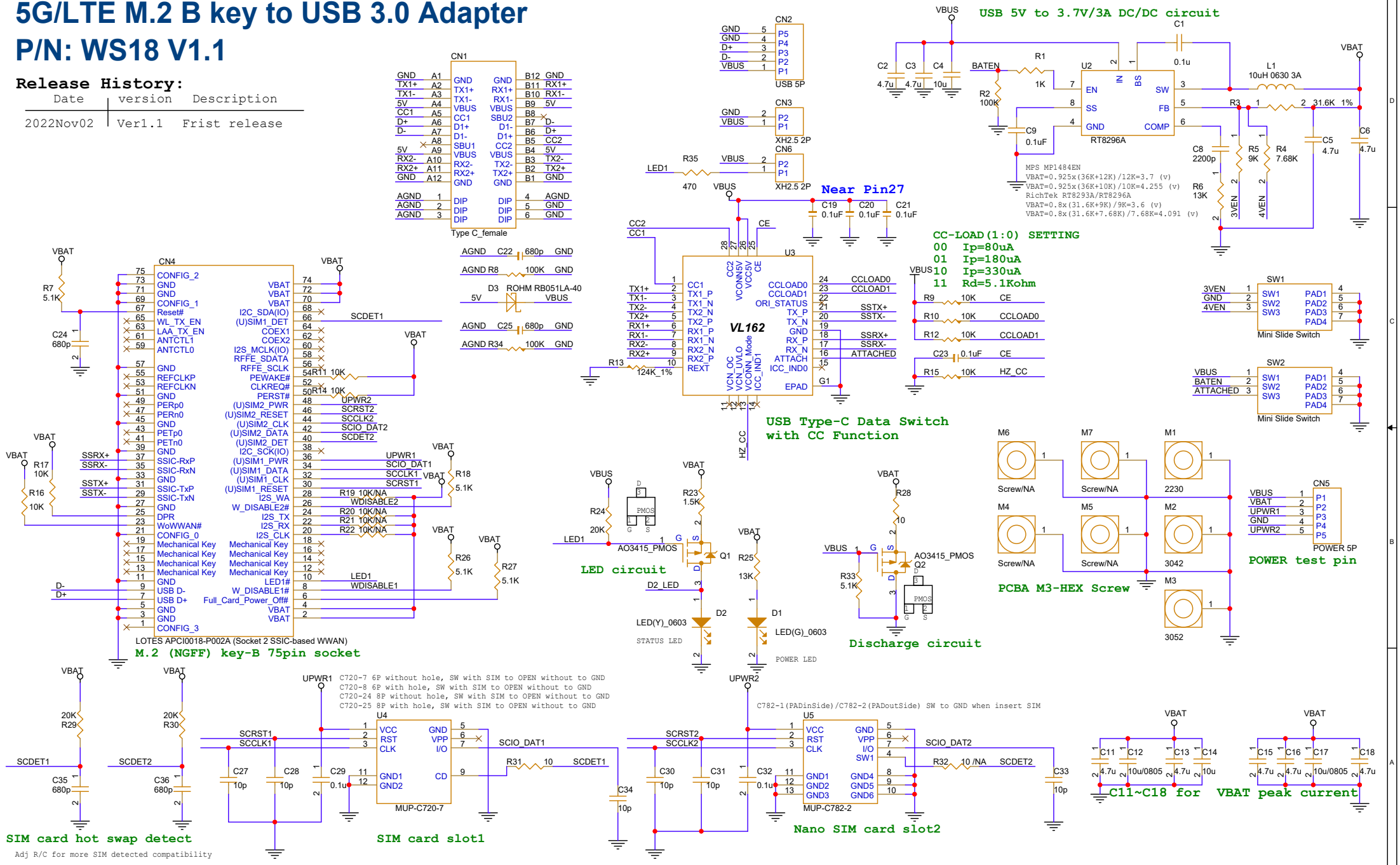
Date	version	Description
2022Nov02	Ver1.1	Frist release